Serie MR175

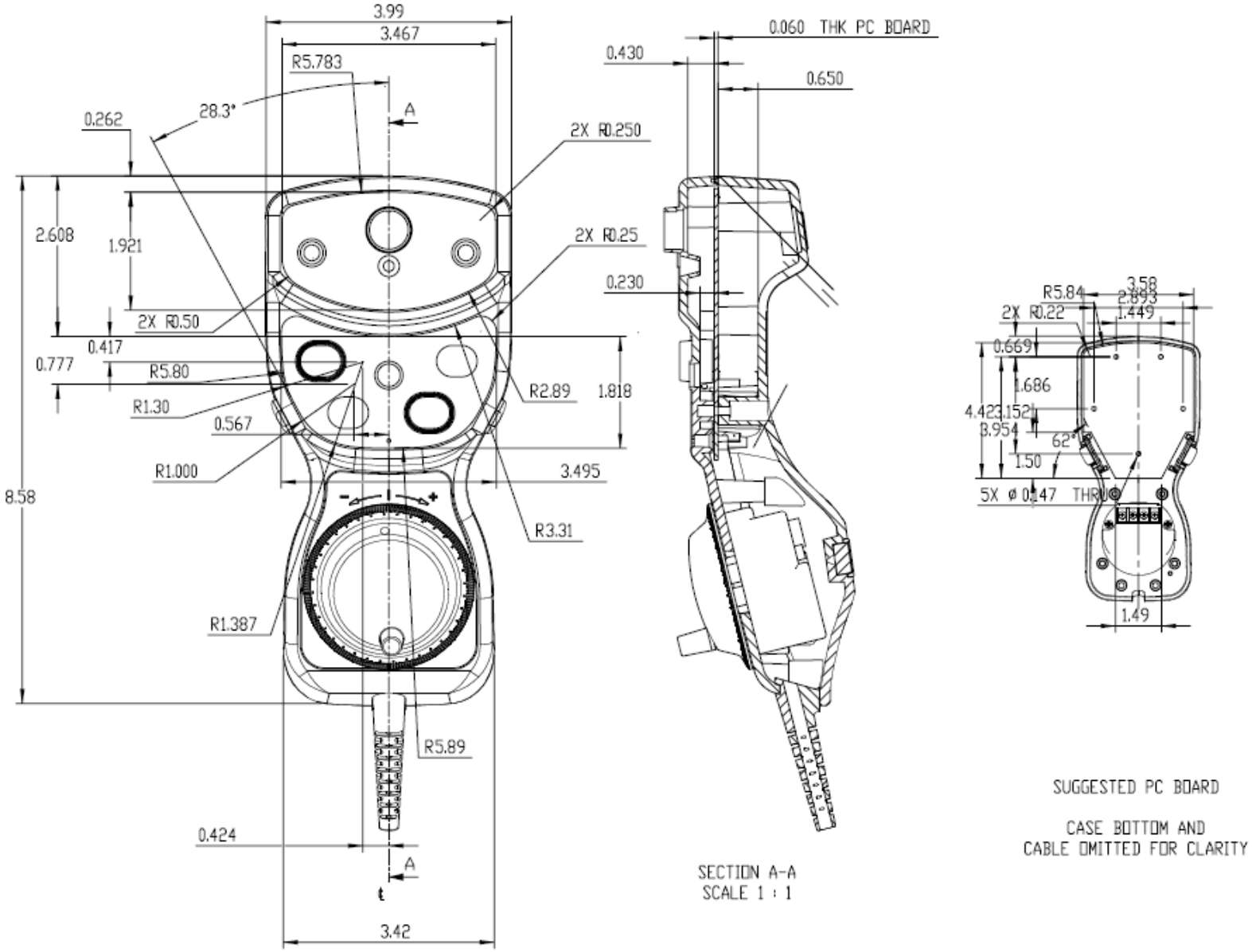
3.99
3.467
R5.783
28.3°
A
0.262
2X R0.250
2.608
1.921
2X R0.25
0.230
2X R0.50
0.417
0.777
R5.80
R1.30
0.567
R2.89
1.818
R1.000
3.495
8.58
R3.31
R1.387
R5.89
0.424
A
3.42
0.060 THK PC BOARD
0.430
0.650
SECTION A-A
SCALE 1 : 1
R5.84
3.58
2.893
1.449
2X R0.22
0.669
1.686
4.423
3.152
3.954
62°
1.50
5X ø 0.147 THRU
1.49
SUGGESTED PC BOARD
CASE BOTTOM AND
CABLE OMITTED FOR CLARITY