## Serie KWG 120

**Massbild / Outline drawing**
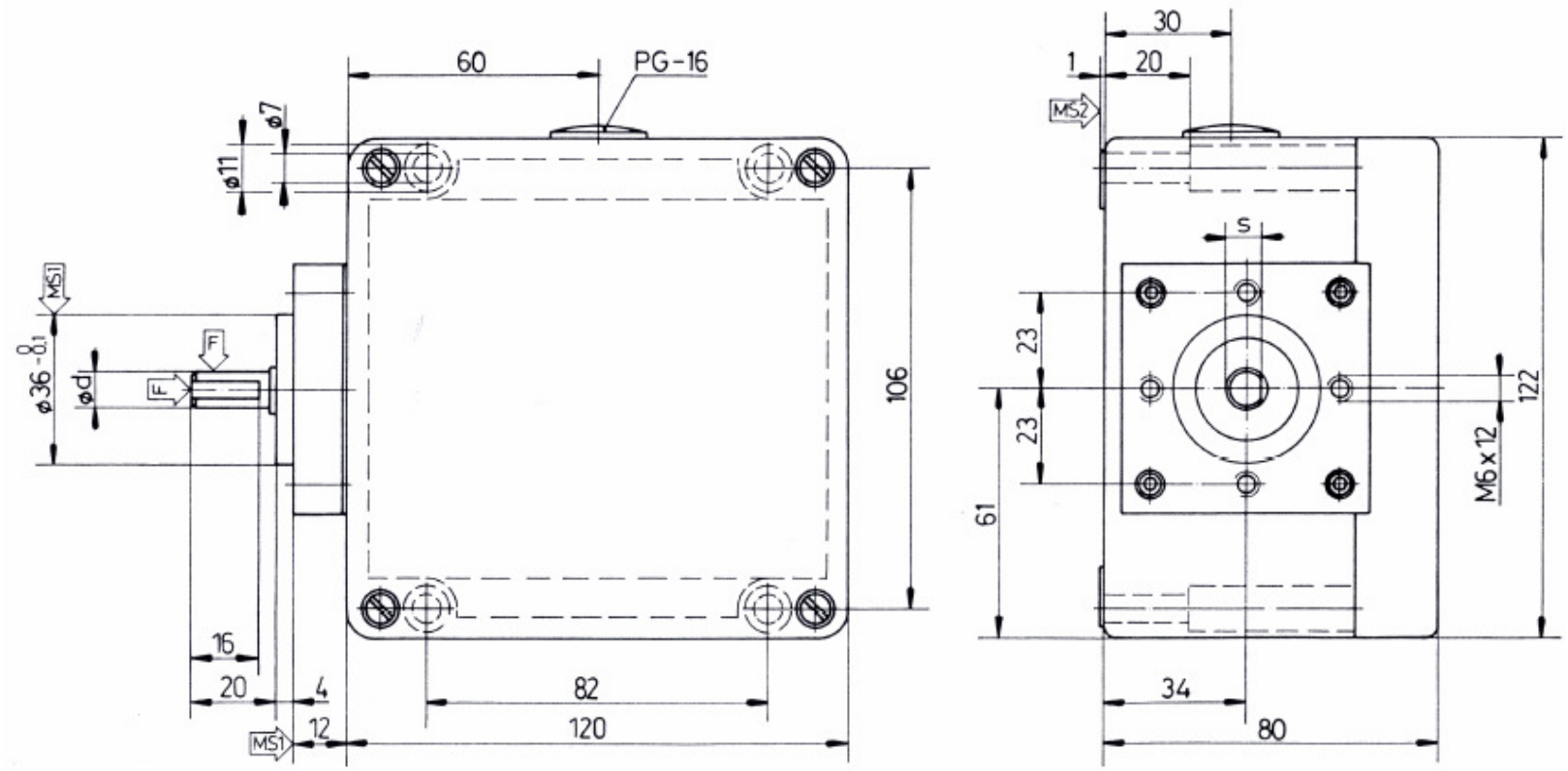
ød = 9-h8 s = 8,5 F = ⇨40 N ⇩80 N MS = Montagefläche / Mounting surface