Serie FRL 90 P

Massbild / Outline drawing
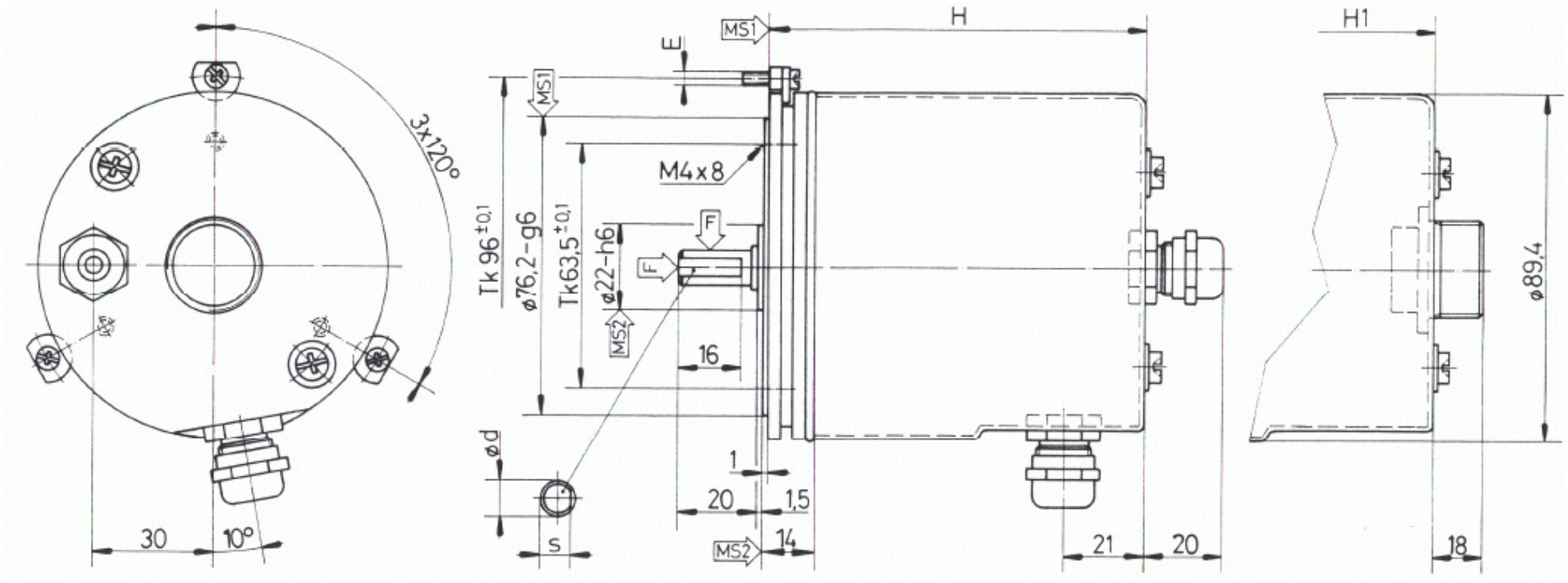
ø d = 9-h8 s = 8,5 E = M3 (4-40 UNC) F = ⇨40 N ⇩80 N MS = Montagefläche / Mounting surfaceH = Option