Serie FE 90

Massbild / Outline drawing
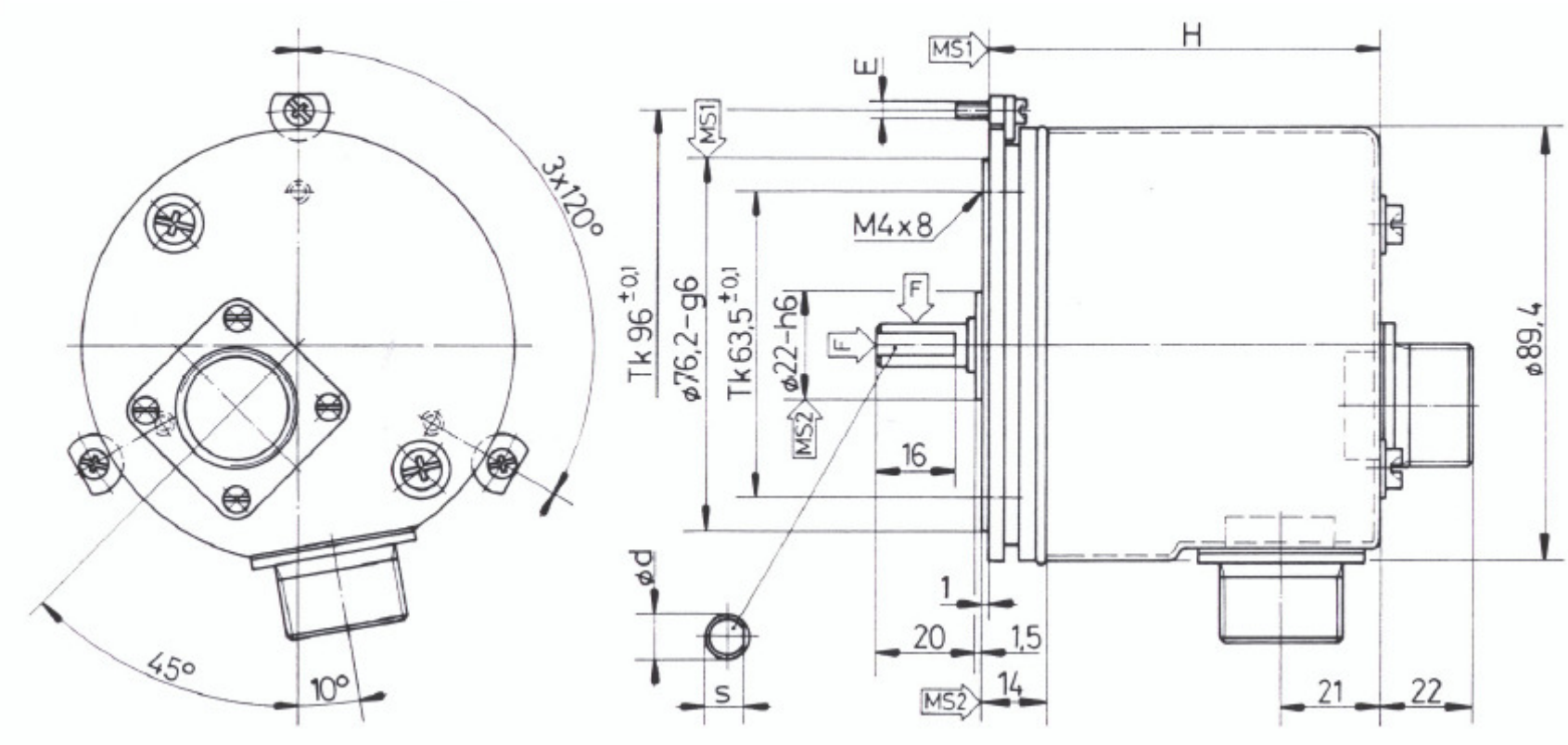
ø d = 9-h8 s = 8,5 E = M3 (4-40 UNC) F = ⇨40 N ⇩80 N MS = Montagefläche / Mounting surface H = 82 mm (3.228 inch)