Serie DWG 120

Massbild / Outline drawing
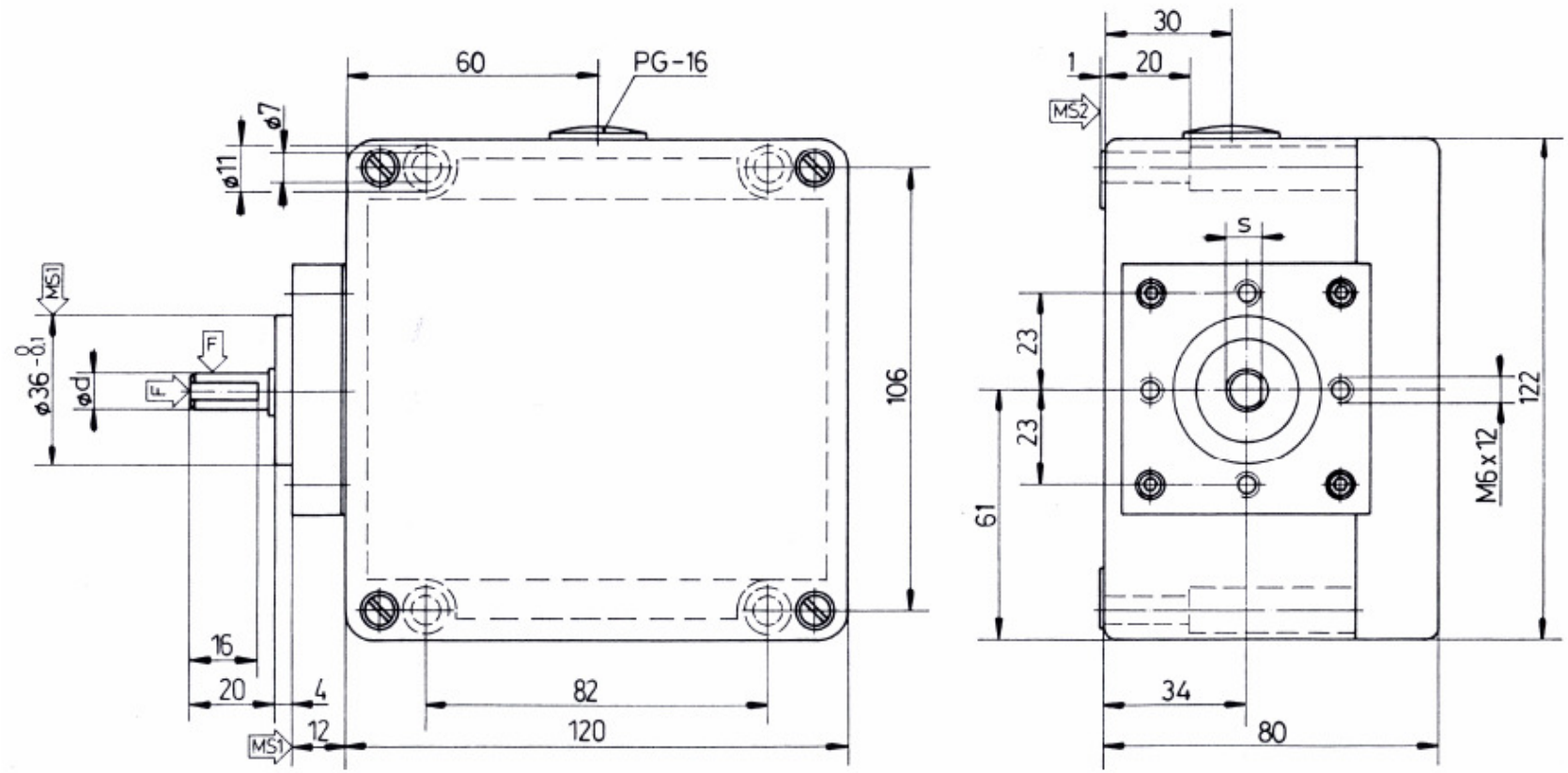
ød = 9-h8 s = 8,5 F = ⇨40 N ⇩80 N MS = Montagefläche / Mounting surface